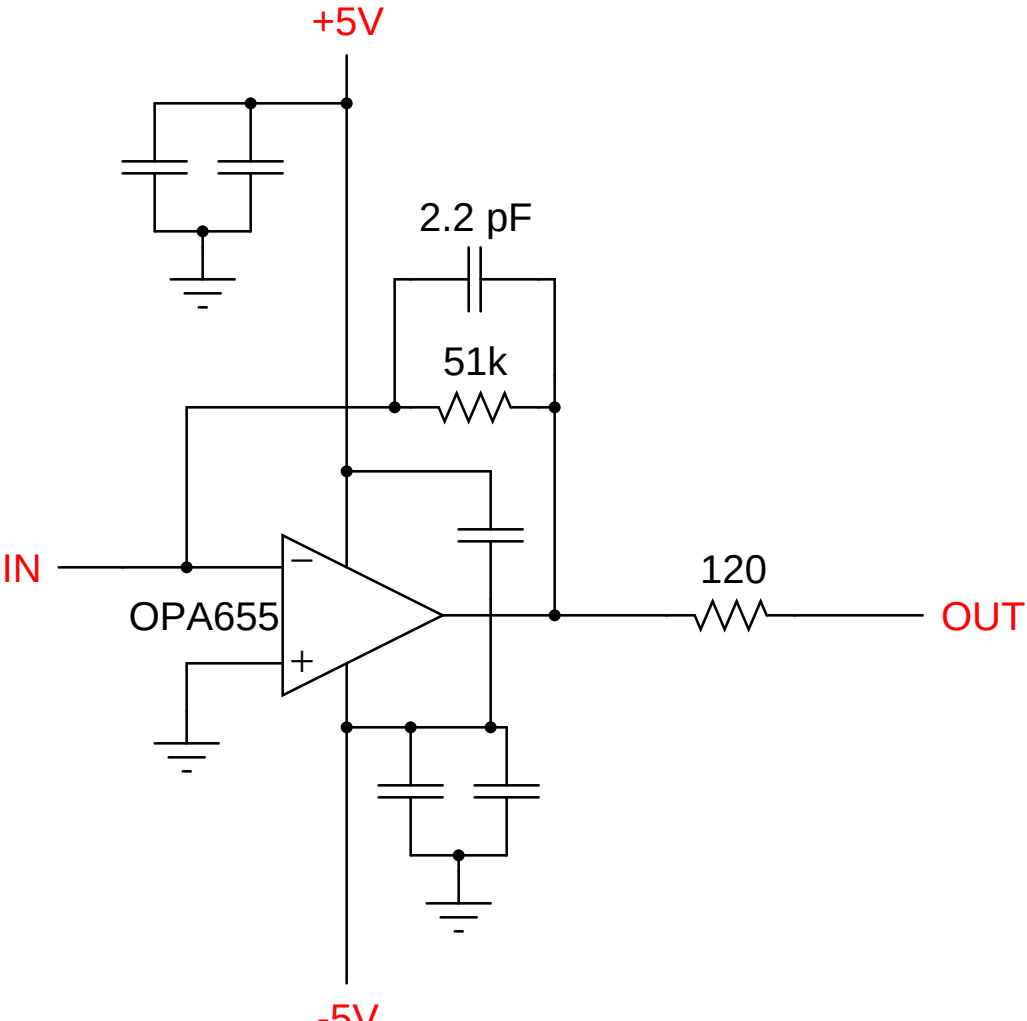
+5V
2.2 pF
51k
IN
OPA655
120
OUT
-5V