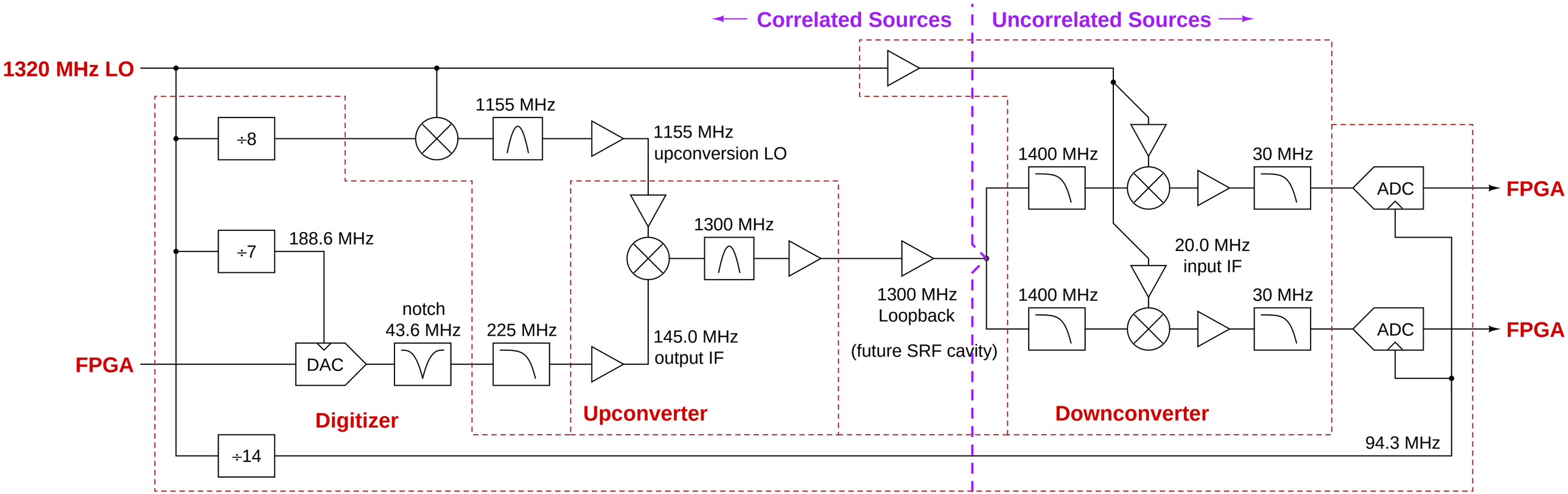
Correlated Sources
Uncorrelated Sources
1320 MHz LO
÷8
1155 MHz
1155 MHz
upconversion LO
÷7
188.6 MHz
1300 MHz
1300 MHz
Loopback
(future SRF cavity)
1400 MHz
30 MHz
ADC
FPGA
20.0 MHz
input IF
1400 MHz
30 MHz
ADC
FPGA
notch
43.6 MHz
225 MHz
145.0 MHz
output IF
FPGA
DAC
Digitizer
Upconverter
Downconverter
÷14
94.3 MHz