SNS Event Link 68 MHz PLL Analog Section

Larry Doolittle, Jozsef Ludvig, Jerry Przybylski
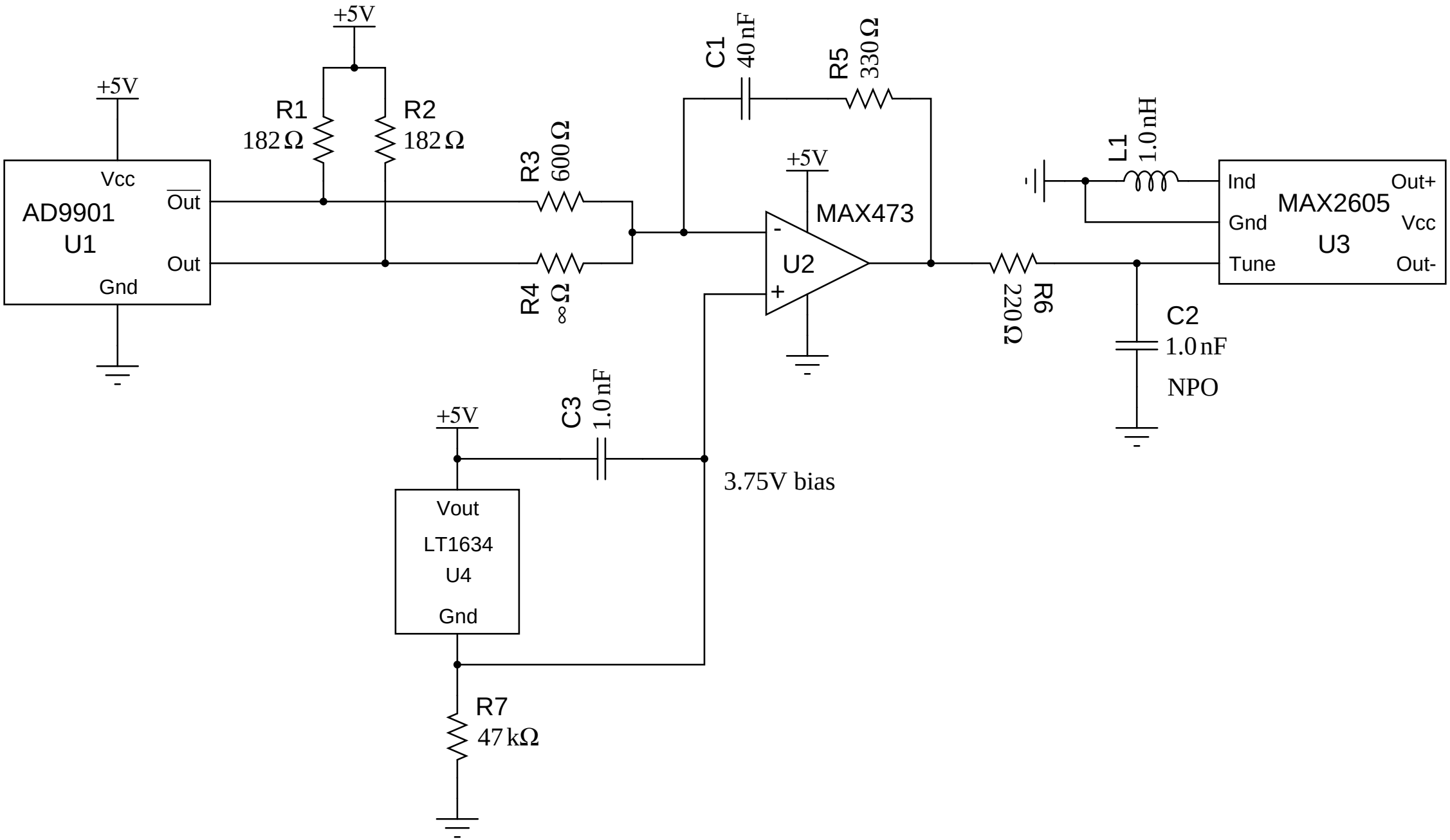
LBNL, Feb 2001 - Oct 2001