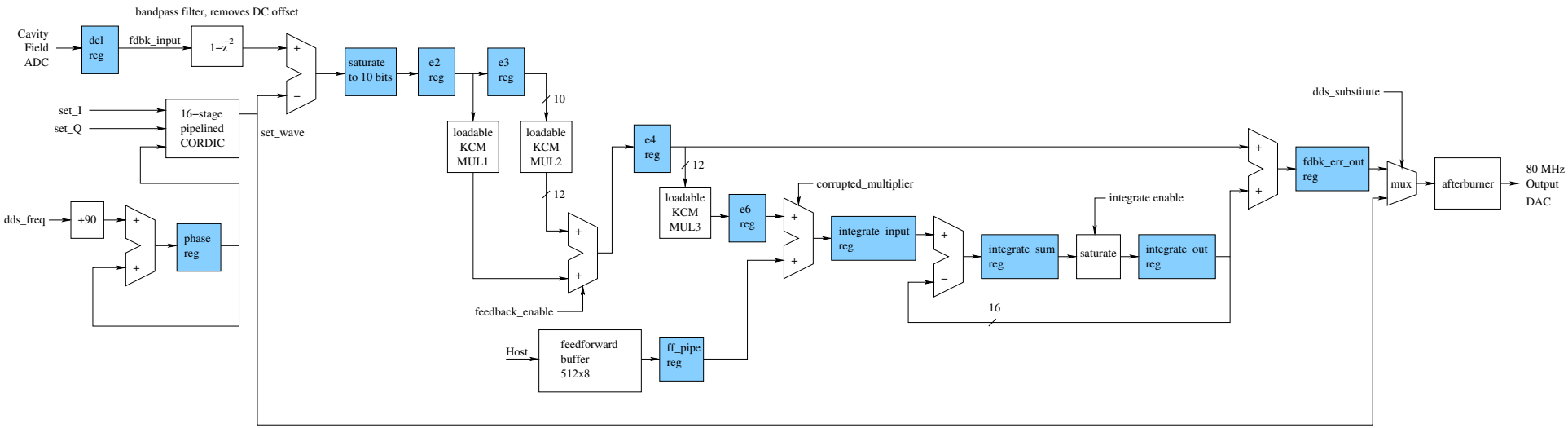
bandpass filter, removes DC offset
Cavity
Field
ADC
dcl
reg
fdbk_input
1−z^−2
+
−
saturate
to 10 bits
e2
reg
e3
reg
10
set_I
set_Q
16−stage
pipelined
CORDIC
set_wave
loadable
KCM
MUL1
loadable
KCM
MUL2
12
dds_freq
+90
+
+
phase
reg
+
+
feedback_enable
e4
reg
12
loadable
KCM
MUL3
e6
reg
corrupted_multiplier
+
+
integrate_input
reg
+
−
integrate_sum
reg
integrate enable
saturate
integrate_out
reg
16
Host
feedforward
buffer
512x8
ff_pipe
reg
dds_substitute
+
+
fdbk_err_out
reg
mux
afterburner
80 MHz
Output
DAC